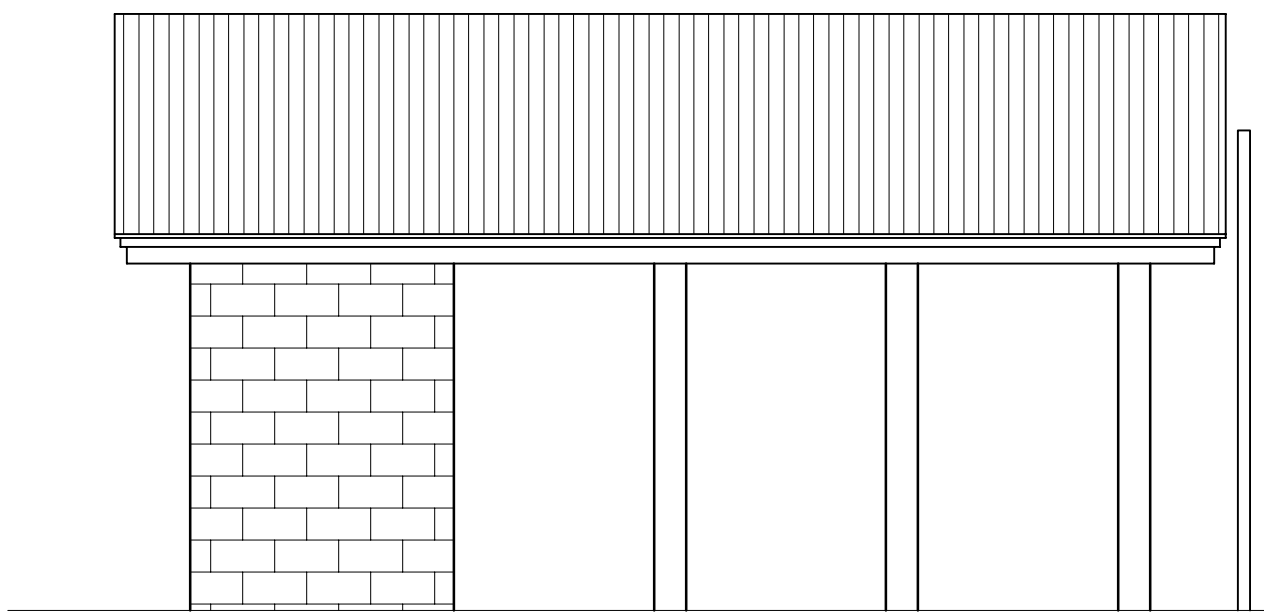

NORTH ELEVATION

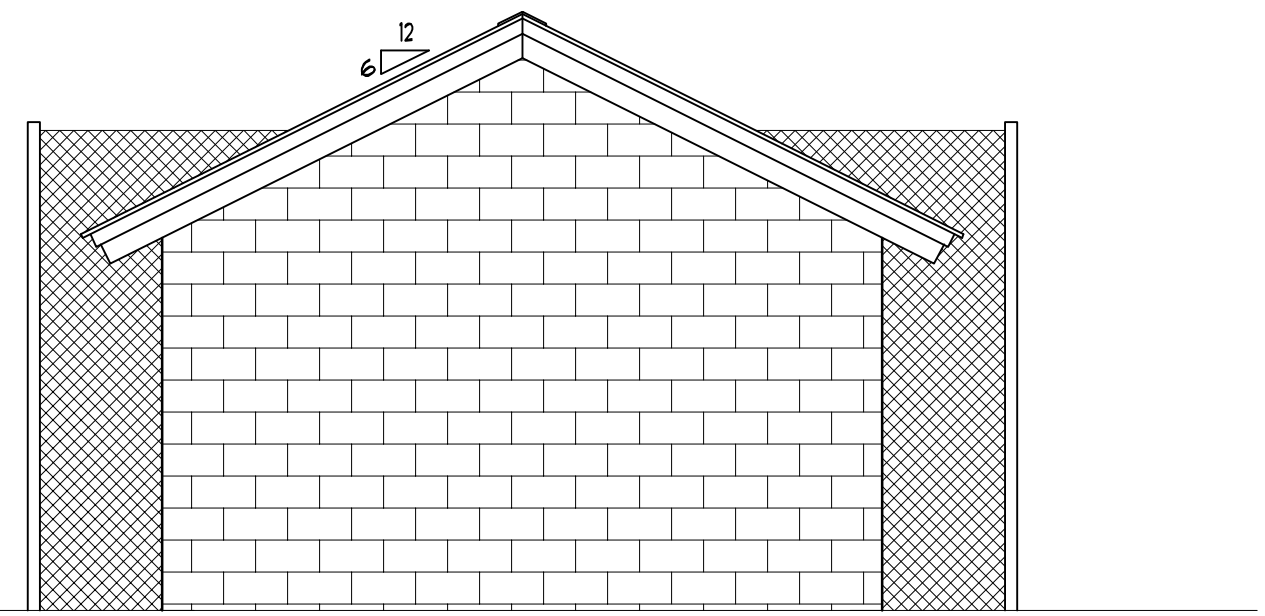

EAST ELEVATION

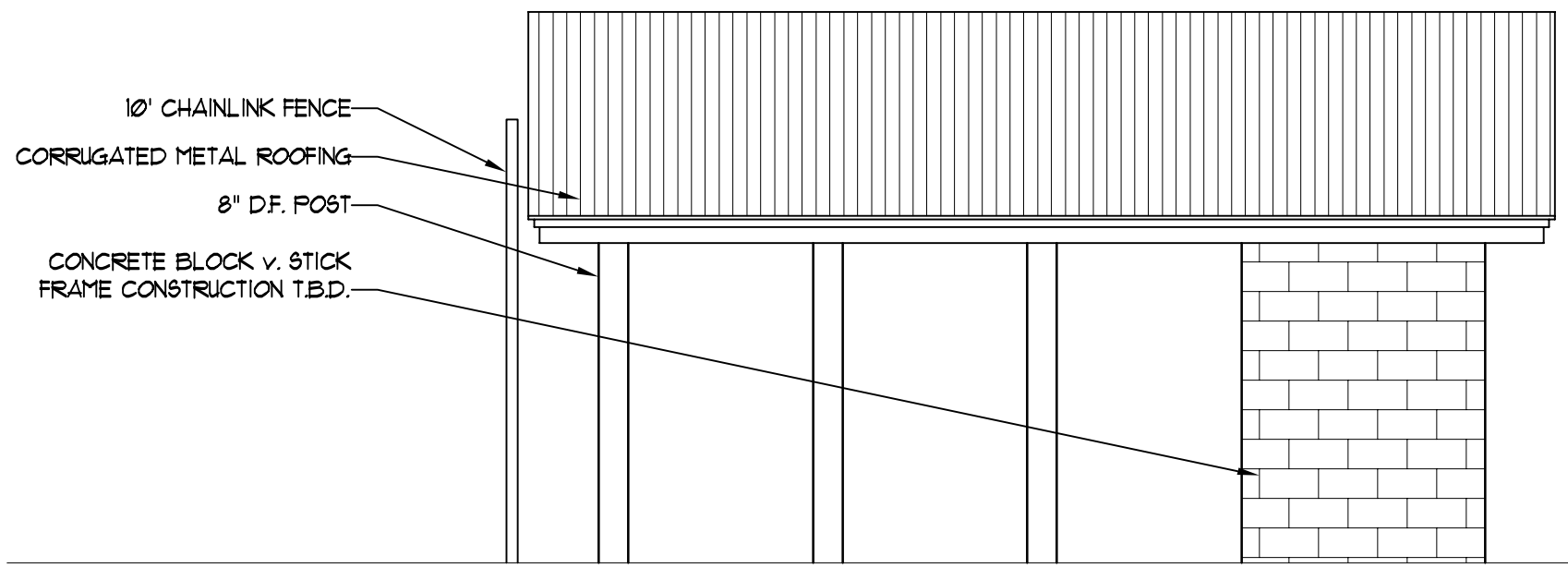

SOUTH ELEVATION

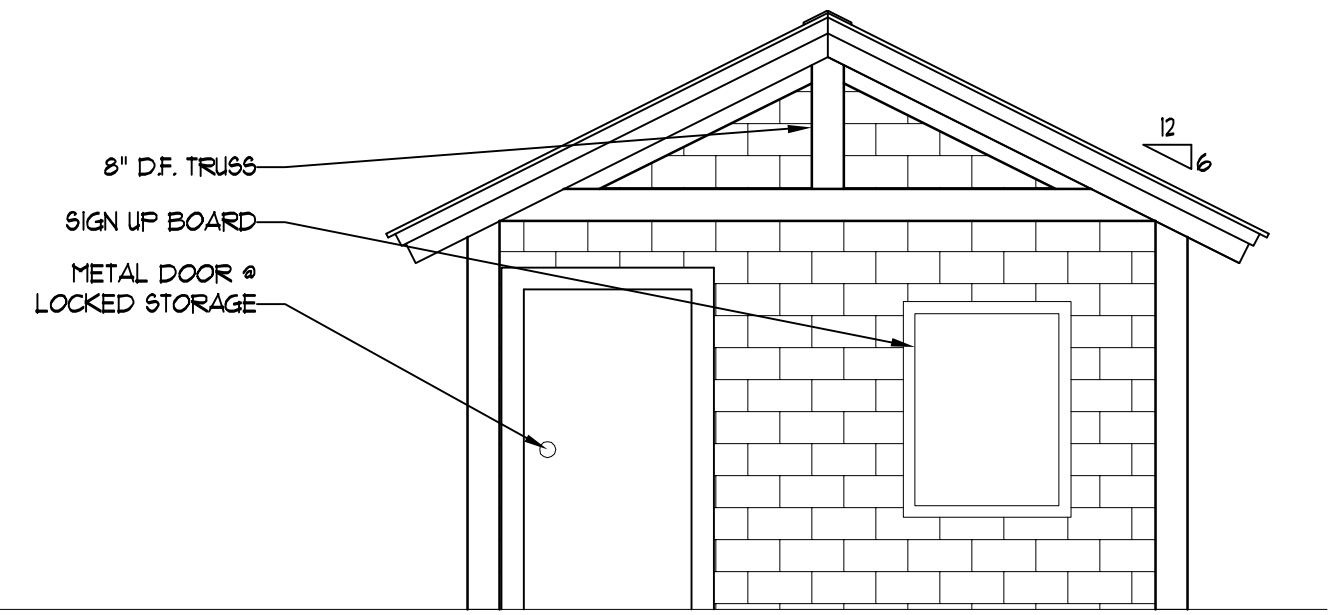

WEST ELEVATION

General Notes

A. PROJECT INFORMATION:
1. Building Jurisdiction *Town of Crested Butte CO*
2. Building Code *IRC 2009*

B. DESIGN INFORMATION:
1. Snow Load *100 PSF*
2. Floor Live Load *40 PSF*
3. Basic Wind Speed *90 MPH (Exposure C)*
4. Seismic Design Cat *C*
5. This structure has been designed to support the loads indicated above as a complete unit with all members and connections installed. The contractor is responsible for the means, method, sequence of construction, and bracing to support any loads imposed on the structure prior to completion.
6. These plans do not show any details for building waterproofing or site drainage. Resource Engineering Group is not responsible for waterproofing (including but not limited to foundation and under slab drainage) or site drainage.

C. FOUNDATION DESIGN:
1. Design of individual and continuous footings is based on an assumed maximum allowable bearing pressure of 2000 lbs. per square foot (dead load plus full live load), placed on the natural undisturbed soil, or compacted structural fill, below frost depth, 36".
2. Soils are presumed non-expansive, non-soluble, and not prone to excessive consolidation. Owner shall retain a soils engineer to inspect the open excavation to verify the structural engineer's assumed design loads. In absence of a soils investigation by a soils engineer, the owner shall assume responsibility of the design values used by the structural engineer.
3. If unusual soil conditions and types are revealed during excavation, contact Structural Engineer or retain a soils engineer.

D. BACKFILLING:
1. Do not backfill against retaining walls until supporting elements, including slabs and floor framing systems, are in place and securely anchored, or adequately shored.
2. Verify type of fill with Soils Engineer or Structural Engineer prior to backfilling.
3. Where walls are backfilled on both sides, backfill equally on each side of walls in 12" lifts, or as required by soil report.

E. REINFORCED CONCRETE:
1. All concrete design is based on the Building Code Requirements for Reinforced Concrete (ACI 318-05).
2. All structural concrete shall have a minimum 28-day compressive strength of 3,000 psi and shall be sulfate resistant.
3. Provide continuous shear keys at vertical cold joints and where shown on drawings. (dowels at vertical/ cold or construction joint).
4. Reinforcement must be continuous through construction joints and have a minimum of (1) splice length on both sides of joint.
5. Rebar in slabs shall be supported by chairs at the height shown on the drawings.
6. Provide control joints in slabs at a maximum of 8' o.c., EW, cut at a depth equal to 1/4 of the slab depth.

F. GROUT & ANCHOR BOLTS:
1. All grout beneath column base plates or steel beams at bearing shall be Dayton Superior "Turbo Grout LT" or approved equal.
2. All anchor bolts shall be 1/2"ø with minimum of 7" embedment spaced at a max of 48" O.C. and within 12" of wall ends and corners (U.N.O.). Anchor bolts located in sill plates on exterior walls and in shears walls shall be A307 wet set "J" bolts. Post installed anchor bolts shall be Simpson Titen HD or Powers Wedge bolts U.N.O. mechanical anchors or epoxy anchors, installed in accordance with the manufacturer's requirements, substitutions must be approved by the Structural Engineer. All anchor bolts thru ACQ treated material shall be double-dipped galvanized, stainless steel or other corrosion resistant metal designed for contact with ACQ.

G. REINFORCING STEEL:
1. All detailing, fabrication, and placement of reinforcing steel shall be in accordance with the ACI Manual of Concrete Practice.
2. Except where otherwise noted on the drawings, reinforcing bars shall conform to ASTM Specification A615 and shall be minimum grade 40.
3. Welded wire fabric shall conform to ASTM Specification A-185.
4. For splices in concrete see table below. At splices in masonry, lap bars 42 diameters. At corners, make horizontal bars continuous or provide corner bars. Around openings and steps in walls provide (2) #5's extending 2'-0 beyond edge of opening or step. (Unless noted otherwise on the drawings horizontal bars at the top of grade beams shall be spliced only at mid-span between piers, and horizontal bottom bars shall be spliced only at pier centerlines).

Grade	Size	Splice Length (in)
40	#4	15
40	#5	20
60	#4	24
60	#5	28

5. Minimum concrete protection (clear cover) for reinforcement shall be:
Concrete cast against earth 3"
Concrete cast against forms 1 1/2"

H. STRUCTURAL STEEL
1. Structural steel shall be detailed, fabricated and erected in accordance with latest provisions of the AISC Manual of Steel Construction and AISC Code of Standard Practice. Welders shall meet the requirements of the AWS *Standard Qualification Procedure* and comply with AWS D1.1 *Structural Welding Code*.
2. All W shapes shall conform to ASTM A992, tube columns Shall conform to ASTM A500 (Gr. B), pipe shapes shall conform to ASTM A53 (Gr. B) and all other sections and or plate material shall conform to ASTM A36.
3. Bolts connecting structural steel shall conform to ASTM A325F. Bolt size shall be 3/4"ø U.N.O. Installation shall be in accordance with AISC *Specification for Structural Joints Using ASTM A325 or A490 Bolts, 1985.*
4. All welds shall be made with E70XX electrodes.
5. Provide shop applied paint in accordance with the Steel Structures Painting Council specifications as for all exterior members, architecturally exposed members, any members exposed to weather for an excessive period of time during construction, and where indicated on construction documents. Omit shop paint on surfaces to be welded, surfaces to receive welded stud, and contact surfaces of bolted connections. Provide field primer paint for painted members at welds, bolted connections, and areas of abraded shop paint.
6. All column base plates shall have 1 1/2" minimum grout to provide continuous bearing.

I. STRUCTURAL WOOD FRAMING:
1. Material Specifications (U.N.O. on plans. See additional notes below)

Member	Material
Studs	Hem-Fir, Stud Grade
Rafters	DFL #2
Joists	DFL #2
Plates	Hem-Fir, #2 or Btr
Plates attached to concrete or masonry	"Standguard" or PT Hem-Fir #2 or Btr
Solid Timber (beams and posts, greater than 2x)	DFL #1 or Btr
Floor Sheathing	3/4" APA rated 24" O.C. Stud-I-Floor T&G
Roof Sheathing	5/8" APA rated 40/20 Exposure I
Wall Sheathing	1/2" APA rated 24/0 Exposure I
Engineered Lumber	
LVL	Laminated Veneer Lumber 1.9E min
PSL	Parallam 1.8E
TSL/LSL	Timberstrand LSL 1.3E studs/1.55E beams
TJI/LP/BCI	Engineered Floor I-Joist

2. All manufactured trusses shall be designed by a Colorado registered engineer to support the full uniform dead and live loads and any other superimposed loads. The fabricator shall determine web arrangement and member forces. Stresses shall not exceed those allowed by the applicable building code.
3. Steel connectors such as those manufactured by Simpson Strong-Tie or USP Lumber Connectors shall be used to join rafters, trusses, joists, or beams to other members at flush-framed conditions, U.N.O. Hangers called out on plans are Simpson hangers, if other hangers are substituted, they must have equal or greater load capacity than that published in the Simpson Catalog. The quantity, type, and size of fastener specified in the Simpson Catalog for each hanger must be installed in all round, obround, and triangle holes in order to achieve desired load capacity.
4. Floor sheathing shall be constructed with the 8'-0" dimension perpendicular to the joist span. End joints shall be staggered. Attach sheathing with APA glue and at edges nail with 8d nails at 6" O.C. and at intermediate supports with 8d nails at 12" O.C. Sheathing shall be T & G.
5. Roof sheathing shall be constructed with the 8'-0" dimension of panel perpendicular to the joist, rafter or truss span. End joints shall be staggered. Attach sheathing at edges with 8d nails at 6" O.C. and at intermediate supports with 8d nails at 12" O.C.
6. Wall sheathing shall be nailed at edges with 8d nails at 6" O.C. and at intermediate supports with 8d nails at 12" O.C. Sheath all exterior walls full height. Block sheathing edges and nail as noted above.
7. Member sizes noted on plans are minimum sizes. Contractor may use larger sizes if desired or requested by architect.
8. Interior load-bearing walls shall be 2x4 or 2x6 studs at 16" O.C. as shown on the plans.
9. All exterior walls shall be 2x6 studs @ 16" O.C. to a maximum height of 12', 2x6 LSL studs to a maximum height of 18', unless otherwise noted.
10. Provide (2) 2x8 over all door and window openings in bearing walls U.N.O.
11. Where header/beam supports are not shown minimum of (1) 2x4 or (1) 2x6 is required, depending on wall thickness. Where supports are shown but not labeled, minimum of (1) 2x4 or (1) 2x6 is required.
12. Provide solid blocking at supports for wood joists and rafters. Within floor joist spaces beneath solid or built-up columns noted on plans, provide an area of solid blocking equivalent to column above.
13. Provide wind/seismic anchor at supports for all trusses and rafters.
14. Except as noted otherwise, minimum nailing shall be provided as specified in the applicable building code.
15. All wood attached to concrete or masonry shall be 2x Strandguard or pressure treated lumber, or protected with a suitable membrane. ("Membrane" refers to Grace Ice and Water Shield or equal) Attach sill plates with 1/2"ø hooked anchor bolts (7" minimum embedment) at 48" on center U.N.O. Anchor bolts for ledgers called out on plans (4" minimum embedment).
16. Bolts connecting wood framing or wood to steel shall be ASTM A307.
17. All fasteners thru ACQ treated material shall be double-dipped galvanized, stainless steel, or other corrosion resistant metal designed for contact with ACQ.
18. Do not bevel beams or purlins unless approved by structural engineer.
19. Roof sections shown as overframed shall be framed with 2x6 rafters @ 24" oc (min). The rafters shall be supported vertically down to the structural roof below at 24" oc in both directions. All rafter ends and vertical supports shall rest on plates on top of roof sheathing below.
20. All floor systems that terminate at exterior walls shall have 1 1/4" Rimboard at the exterior of the wall.

J. GLUE LAMINATED BEAMS
1. Laminated members shall be designed and fabricated in accordance with *The Standard Specifications for the Design and Fabrication of Structural Glue Laminated Lumber* published by the AITC and the appropriate Lumber Producers' Association.
2. Use exterior glue for all exposed laminated members.
3. All members exposed to weather shall receive one coat of end sealer to trimmed ends and seal all exposed surfaces with sealer coat as soon as practical after erection.
4. Appearance grade of wood and glulam members shall be in accordance with architectural drawings.
5. All members shall be AITC 24F-V4 (GL) or AITC 24F-V8 (BGL) as noted.

Abbreviations

BGL- Balanced Glue Laminated Beam
Btr- Better
CFS- Custom Fabricated Saddle
CJ- Construction Joint (Cold Joint)
CTD- Centered
DFL- Douglas Fir Larch
EW- Each Way
HAS- Headed Anchor Stud
HF- Hem-Fir
HSS- Hollow Structural Steel (Tube Steel)
GL- Glue Laminated Beam
OC- On Center
PAF- Powder Actuated Fastener
PT- Pressure Treated
RS- Rough Sawn
SJI- Steel Joist Institute
SS- Select Structural
SSH- Short Slotted Holes
TBD- To Be Determined
Typ - Typical (use at all similar locations U.N.O.)
UNO- Unless Noted Otherwise

Drawing Index

S1.0 Structural General Notes/Legend/Details
S1.1 Plans

Legend

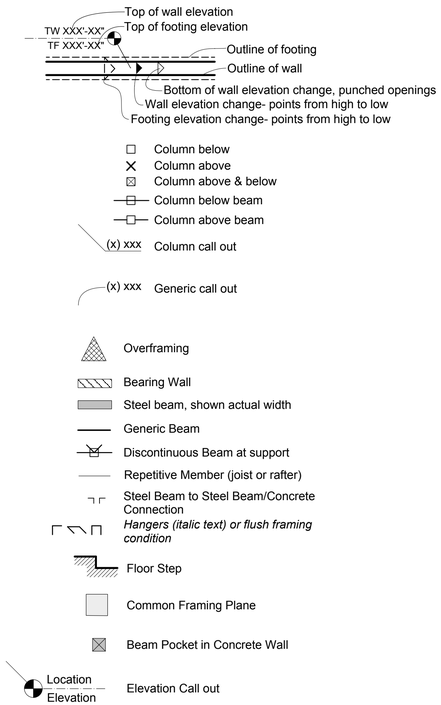

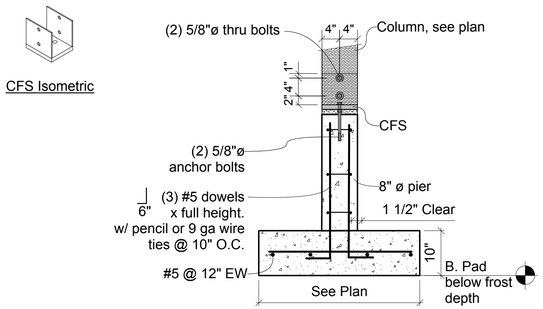

1 / S1.0 Foundation with GL Column
Scale: 3/4" = 1'-0"

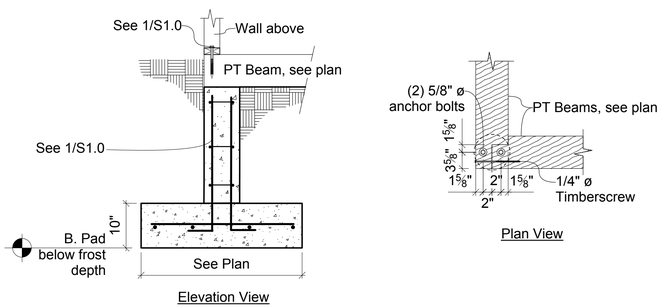

2 / S1.0 Foundation with PT Beam
Scale: 3/4" = 1'-0"

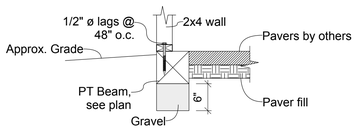

3 / S1.0 Wall Section
Scale: 3/4" = 1'-0"

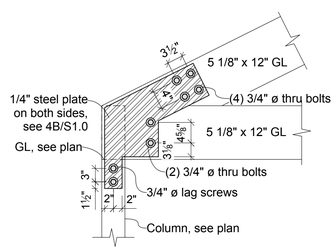

4A / S1.0 Truss Connections
Scale: 3/4" = 1'-0"

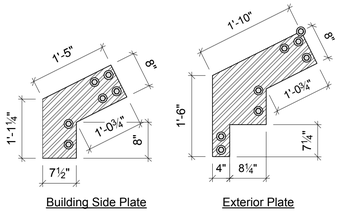

4B / S1.0 Truss Connections
Scale: 3/4" = 1'-0"

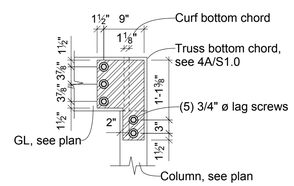

4C / S1.0 Truss Connections
Scale: 3/4" = 1'-0"

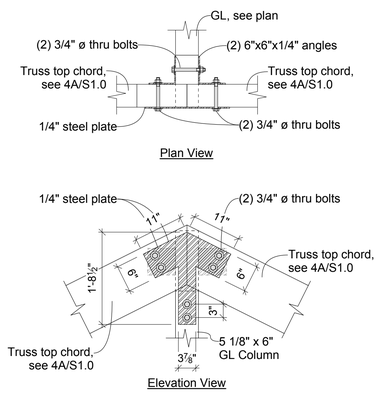

4D / S1.0 Truss Connections
Scale: 3/4" = 1'-0"

REGroup
Resource Engineering
reginc.com • 970.349.1216
Consulting Engineers
Mechanical • Structural • Energy

efficiency | sustainability | simplicity

please recycle these drawings

CB Tennis Pavilion

Elk Ave and 6th St
Crested Butte, Colorado

Project Number	2309
Engineered By	*Scott Hargrove, PE*
Reviewed By	*David Houghton, PE*

Issued for	Date
Construction Set	2/26/13

Structural
General Notes and Details

S1.0

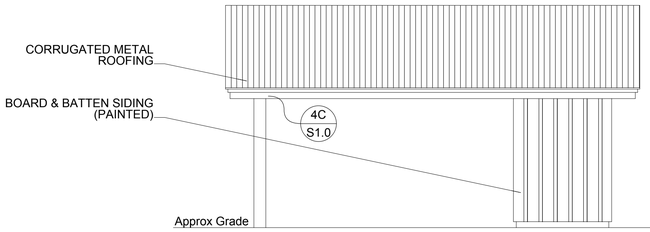

WEST ELEVATION

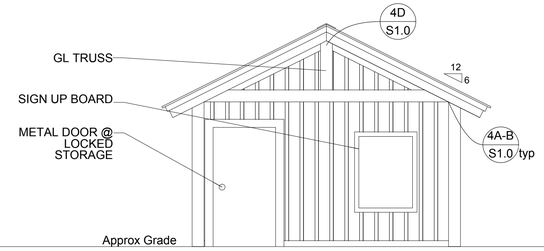

NORTH ELEVATION

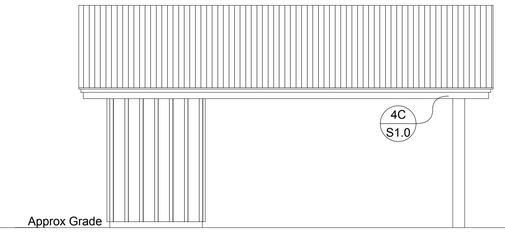

EAST ELEVATION

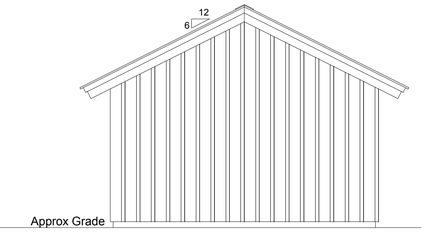

SOUTH ELEVATION

1 / S1.1 Elevations
Scale: 1/4" = 1'-0"

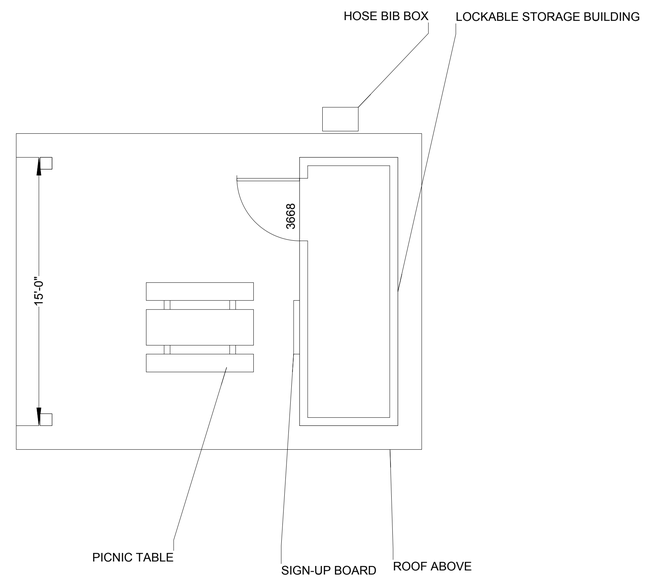

2 / S1.1 Floor Plan
Scale: 1/4" = 1'-0"

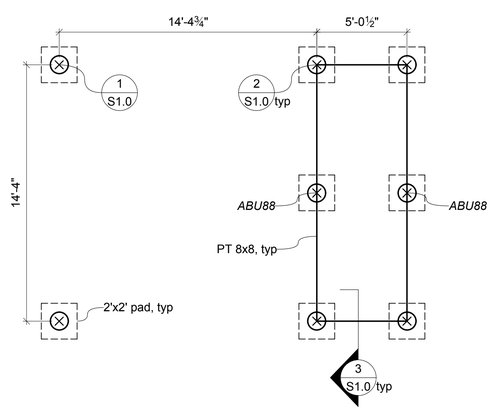

3 / S1.1 Foundation Plan
Scale: 1/4" = 1'-0"

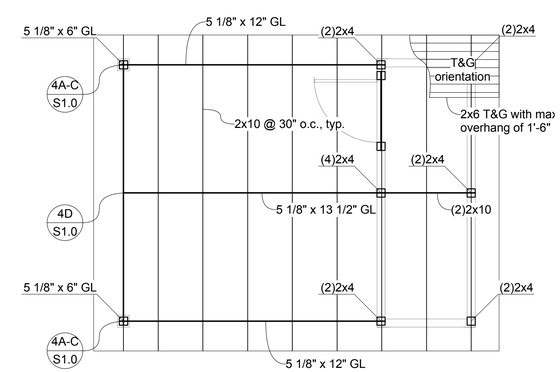

4 / S1.1 Roof Framing Plan
Scale: 1/4" = 1'-0"

REGroup
Resource Engineering
reginc.com • 970.349.1216

Consulting Engineers
Mechanical • Structural • Energy

efficiency | sustainability | simplicity

please recycle these drawings

CB Tennis Pavilion

Elk Ave and 6th St
Crested Butte, Colorado

Project Number	2309
Engineered By	*Scott Hargrove, PE*
Reviewed By	*David Houghton, PE*

Issued for	Date
Construction Set	2/26/13

Plans

S1.1